Spare parts list

(5.970-970.0) Spare parts list BR 40/10 C USA

Table of contents

3 Spare parts list BR 40/10 C USA (5.970-970.0) 3
10 Retaining bracket and switch 4
11 Retaining bracket 5
12 Switch 7
20 Top part 9
21 Tank 10
22 Individual parts 12
30 Bottom part individual parts 15
31 Brush housing 16
32 Transmission 19
40 Chassis 22
50 Accessories pad roll 24
3 Hub pad roll BR VS (5.120-313.0) 26
60 Accessories carpet cleaning 28
1 ABS carpet cleaning BR 40/10 C (2.783-014.0) 30

POS	Description	Quantity	Unit
10	Retaining bracket and switch	1.000	ST
20	Top part	1.000	ST
30	Bottom part individual parts	1.000	ST
40	Chassis	1.000	ST
50	Accessories pad roll	1.000	ST
60	Accessories carpet cleaning	1.000	ST

10 Retaining bracket and switch

POS	Description	Quantity	Unit
11	Retaining bracket	1.000	ST
12	Switch	1.000	ST

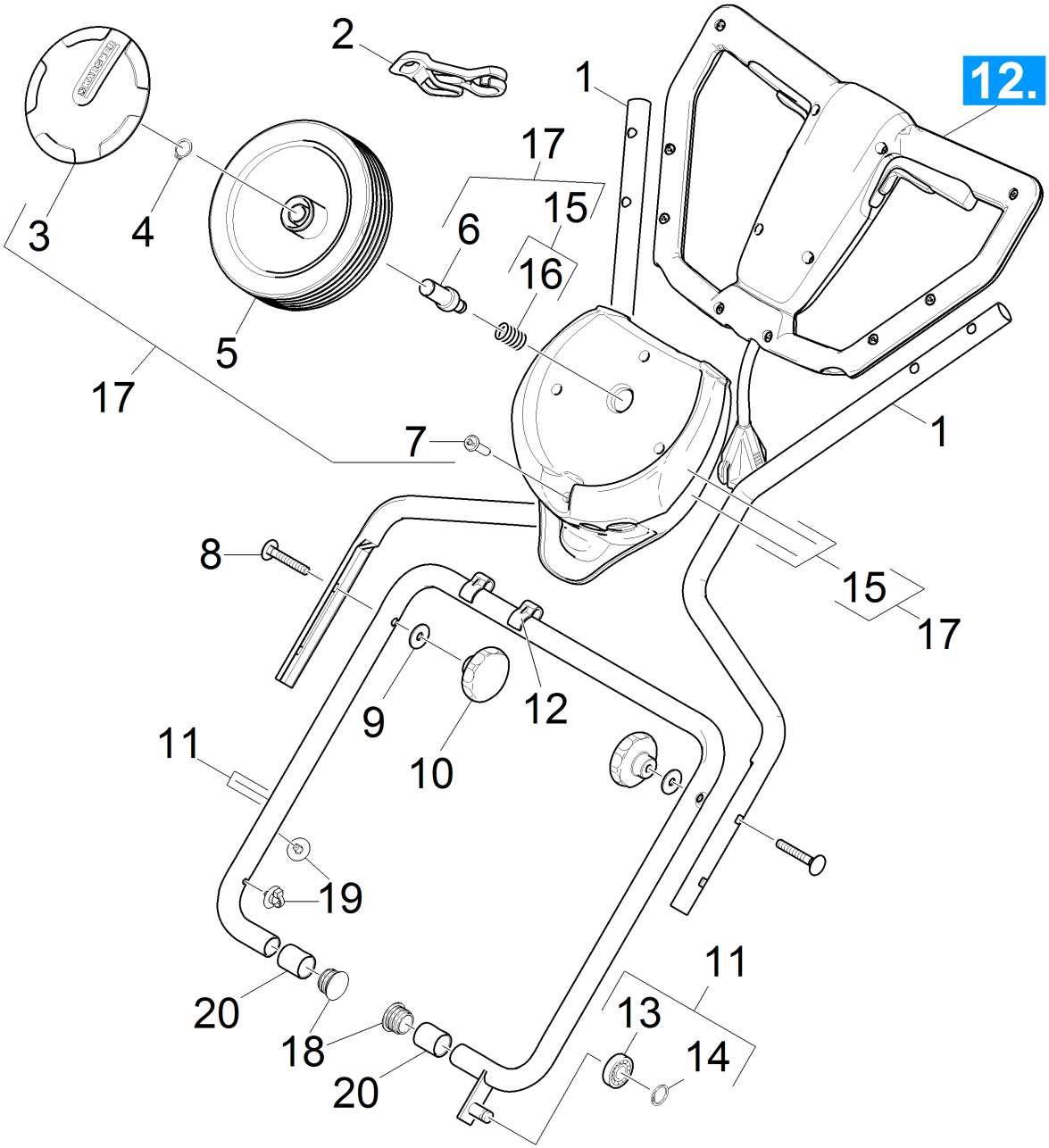
12.
1
2
3
4
5
6
7
8
9
10
11
12
13
14
15
16
17
18
19
20

11 Retaining bracket

POS	Article no.	Description	Quantity	Unit	Foot note text
1	5.034-783.0	Retaining bracket top part	2.000	ST	
2	6.641-776.0	Strain relief	1.000	ST	
3	6.435-197.0	Wheel cap zinc yellow	2.000	ST	YELLOW
3	5.064-392.0	Wheel cap grey	2.000	ST	GREY
4	7.343-005.0	Locking ring 16x1-FST-PHR DIN 471	2.000	ST	
5	6.435-196.0	Wheel D 180	2.000	ST	
6	5.034-795.0	Axle transport wheel	2.000	ST	
7	7.303-108.0	Screw 5x20 -10.9-R2R (In6Rd)	4.000	ST	
8	7.303-009.0	Saucer-head screw M8x50-8.8-A2E DIN 603	2.000	ST	
9	7.312-277.0	Washer 8-200HV-A2E ISO7093-1	2.000	ST	
10	6.321-177.0	Turning knob yellow D55mm	2.000	ST	
11	4.034-201.0	Retaining bracket bottom part replacemen	1.000	ST	
12	5.050-426.0	Cable clip D22	2.000	ST	
13	7.401-149.0	Ball bearing 608-2RS -Wälzl.St DIN 625	1.000	ST	
14	7.343-300.0	Lock washer 7-A2 DIN 6799	1.000	ST	
15	4.783-003.0	Set wheel vat	1.000	ST	
16	5.332-981.0	Pressure spring	2.000	ST	
17	2.783-013.0	Add-on kit transport wheel BR 40/10C Cla	1.000	ST	
18	6.368-173.0	Drain plug	2.000	ST	
19	6.649-498.0	Cable tie with fixing 150x4,6	2.000	ST	
20	6.034-003.0	Bush plain bearing	2.000	ST	

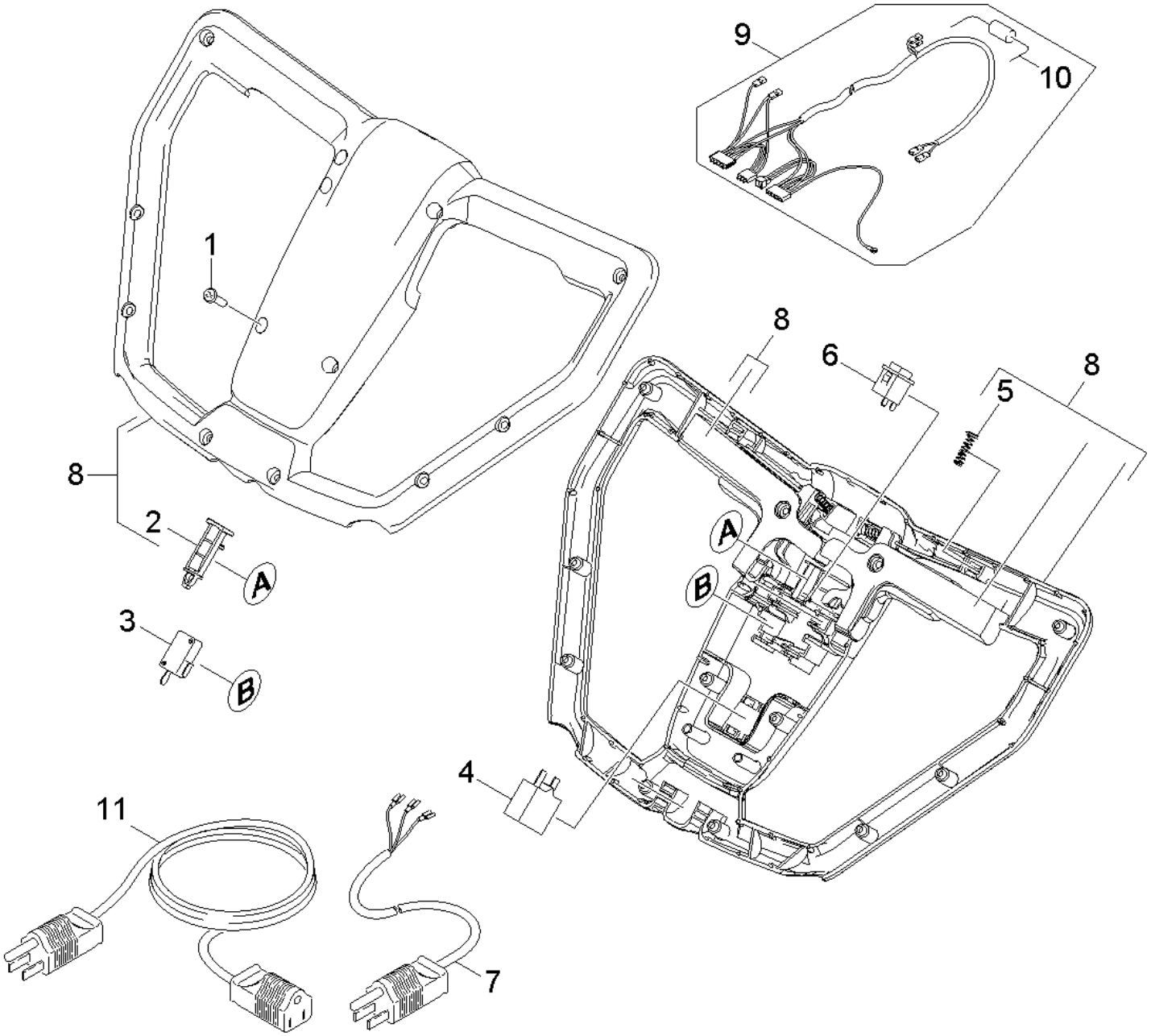
9
10
1
8
6
8
5
8
2
A
A
B
3
B
4
11
7

12 Switch

POS	Article no.	Description	Quantity	Unit
1	7.303-108.0	Screw 5x20 -10.9-R2R (In6Rd)	12.000	ST
2	5.050-433.0	Slide of a press switch	1.000	ST
3	6.630-426.0	Main switch	2.000	ST
4	6.630-428.0	Motor protecting switch 9A	1.000	ST
5	5.332-944.0	Spring conical	5.000	ST
6	6.630-427.0	Switch water pump	2.000	ST
7	6.649-695.0	Power cable NEMA 5-15	1.000	ST
8	4.783-015.0	Set operating unit	1.000	ST
9	6.650-484.0	Cable harness BR 40/10C KNA	1.000	ST
10	6.664-059.0	Diode Typ EM 516	1.000	ST
11	8.632-315.0	CORD SET, 10/3 SJT X 50 FT YLW	1.000	ST

20 Top part

POS	Description	Quantity	Unit
21	Tank	1.000	ST
22	Individual parts	1.000	ST

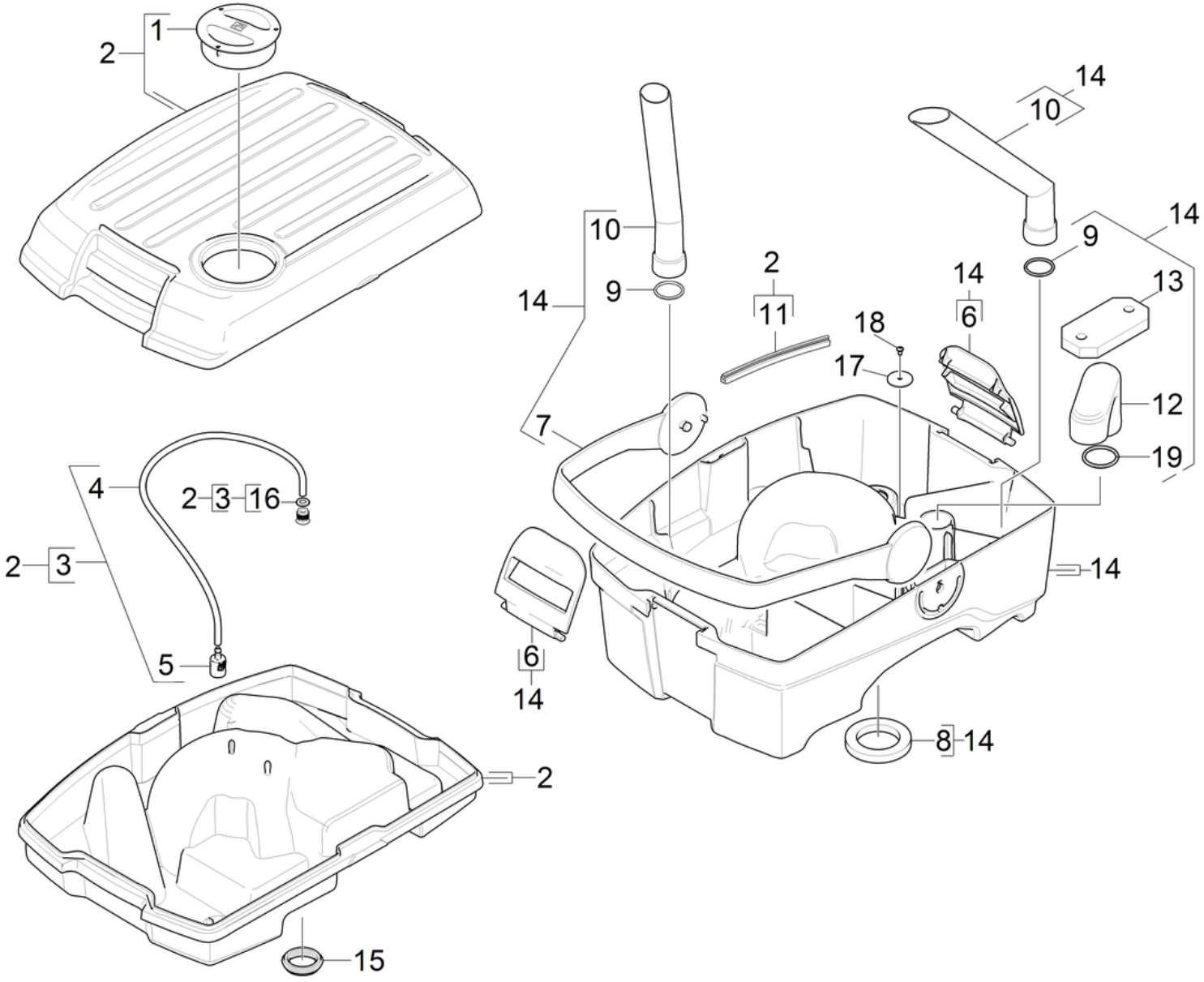
1
2
14
10
10
9
14
2
11
14
6
18
17
9
14
13
12
19
7
4
2
3
16
2
3
5
14
6
14
8
14
2
15

21 Tank

POS	Article no.	Description	Quantity	Unit	Foot note text
1	5.050-359.0	Cover metering fresh water	1.000	ST	
2	4.783-004.0	Tank replacement	1.000	ST	
3	4.033-753.0	Valve tank completely	1.000	ST	
4	6.388-216.0	Hose DN 5	1.000	M	TO ORDER AS CUT GOODS
5	5.731-664.0	Filter with weight	1.000	ST	
6	5.051-263.0	Closure tank	2.000	ST	
7	5.050-314.0	Carrier handle tank black	1.000	ST	BLACK
7	5.033-599.0	Carrier handle tank yellow	1.000	ST	YELLOW
8	5.034-868.0	Joint ring	1.000	ST	
9	6.362-108.0	O-Ring seal 30,0 X 3,0	2.000	ST	
10	5.050-457.0	Suction tube waste water tank	2.000	ST	
11	6.273-282.0	Profile gasket 8,4x7	1.000	M	TO ORDER AS CUT GOODS
12	5.051-453.0	Elbow float	1.000	ST	
13	5.585-060.0	Float BR 40/10	1.000	ST	
14	4.034-232.0	Tank complete waste water	1.000	ST	GREY
14	4.034-195.0	Tank complete waste water	1.000	ST	YELLOW
15	5.050-541.0	Form seal valve	1.000	ST	
16	7.312-014.0	Washer 10-A4 ISO 7089	1.000	ST	ORDER ACCORDING TO CONSUMPTION
17	5.099-933.0	Washer	1.000	ST	
18	7.303-095.0	Screw 4x 12-ST-10.9-R2R (IN6RD)	1.000	ST	
19	6.363-117.0	O-Ring seal 41,0 x 2,5	1.000	ST	ORDER ACCORDING TO CONSUMPTION

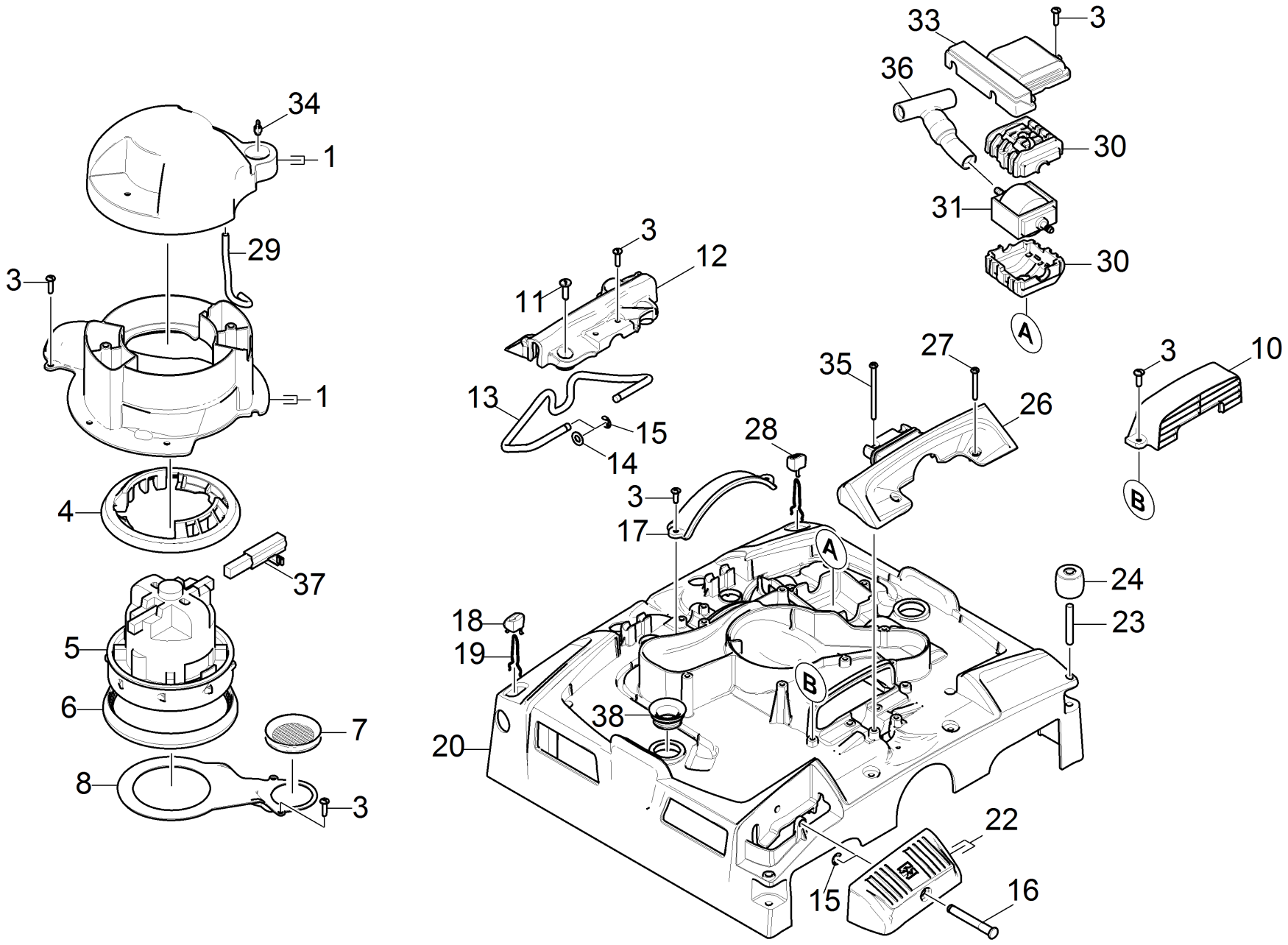
34
1
29
3
1
4
37
5
6
7
8
3
33
3
36
30
31
30
A
3
12
11
13
15
14
35
27
26
28
3
17
A
B
3
10
B
24
23
18
19
38
20
22
15
16

22 Individual parts

POS	Article no.	Description	Quantity	Unit	Foot note text
1	4.033-327.0	Set Housing Valve	1.000	ST	
3	7.303-108.0	Screw 5x20 -10.9-R2R (In6Rd)	18.000	ST	
4	5.050-362.0	Seal above vac motor	1.000	ST	
5	4.035-143.0	Turbine replacement 120V, 60Hz	1.000	ST	
6	5.050-363.0	Seal bottom vac motor	1.000	ST	
7	5.363-344.0	Joint ring	1.000	ST	
8	5.050-449.0	Covering cap vacuum channel	1.000	ST	
9	7.303-107.0	Screw 5x16 -10.9-P2R (K-In6Rd)	4.000	ST	
10	5.050-407.0	Splash guard right	1.000	ST	
11	7.303-067.0	Screw M8x16-ST-R3R (IN6RD)	4.000	ST	
12	5.050-413.0	Retaining bracket fixing left	1.000	ST	
13	5.034-827.0	Retaining bracket adjustment	1.000	ST	
14	7.312-017.0	Washer 8-A2 ISO 7089	2.000	ST	
15	7.343-300.0	Lock washer 7-A2 DIN 6799	3.000	ST	
16	5.034-786.0	Bolt pedal	1.000	ST	
17	5.050-406.0	Splash guard left	1.000	ST	
18	5.050-448.0	Pusher rear transport wheel	1.000	ST	
19	5.034-839.0	Spring transport wheel	2.000	ST	
20	5.050-308.0	Cover brush housing	1.000	ST	
22	4.783-001.0	Set pedal	1.000	ST	
23	5.034-847.0	Bolt deflector roll	2.000	ST	
24	5.050-405.0	Deflector roll	2.000	ST	
26	5.050-414.0	Retaining bracket fixing right	1.000	ST	
27	7.303-111.0	Screw 5x50 -10.9-R2R (K-In6Rd)	4.000	ST	
28	5.050-447.0	Pusher front transport wheel	1.000	ST	
29	6.388-216.0	Hose DN 5	1.000	M	TO ORDER AS CUT GOODS
30	5.050-408.0	Bearing pump	2.000	ST	
31	6.473-532.0	Motor pump 120V 60Hz	1.000	ST	
33	5.050-410.0	Cover pump	1.000	ST	
34	5.108-192.0	Pin valve	1.000	ST	
35	7.303-171.0	Screw 5x80 -10.9-R2R (K-In6Rd)	2.000	ST	
36	4.050-956.0	Check valve	1.000	ST	
37	6.610-270.0	Carbon brush	2.000	ST	

22 Individual parts

POS	Article no.	Description	Quantity	Unit	Foot note text
38	5.050-415.0	Joint ring	2.000	ST	

30 Bottom part individual parts

POS	Description	Quantity	Unit
31	Brush housing	1.000	ST
32	Transmission	1.000	ST

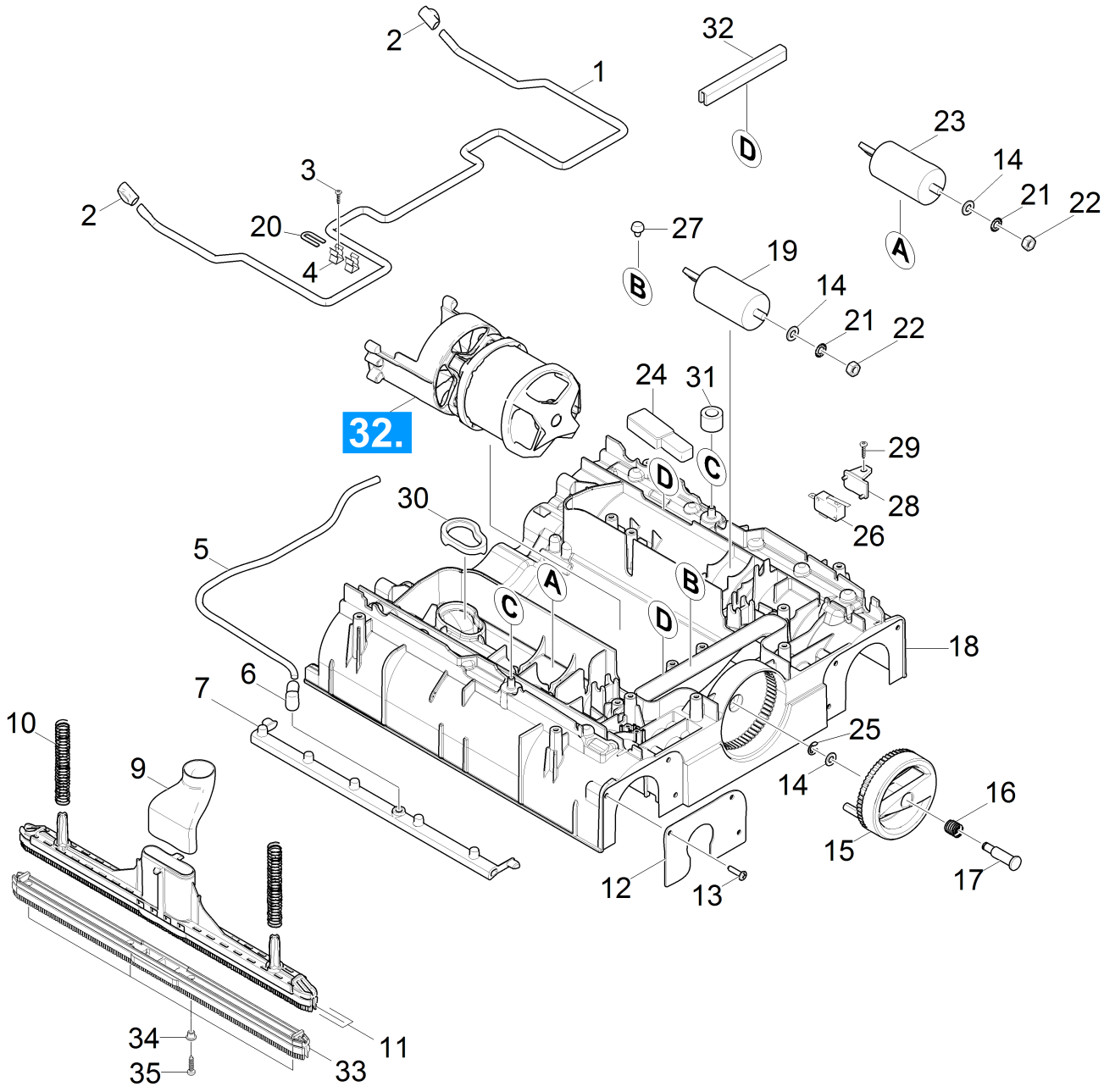
2
1
32
D
23
14
21
22
A
3
2
20
4
27
B
19
14
21
22
32.
24
31
C
29
28
26
D
30
5
A
B
C
D
18
6
7
10
9
25
14
16
15
17
12
13
34
35
33
11

31 Brush housing

POS	Article no.	Description	Quantity	Unit	Foot note text
1	5.034-784.0	Retaining bracket suction bar	1.000	ST	
2	5.050-416.0	Pusher suction bar	2.000	ST	
3	6.303-557.0	Screw 3x12 Kombitorx T8	2.000	ST	
4	6.330-410.0	Spring clip X130-8L	2.000	ST	
5	6.388-216.0	Hose DN 5	1.000	M	TO ORDER AS CUT GOODS
6	5.050-411.0	Angle bushing water distribution	2.000	ST	
7	5.050-992.0	Water distributor	2.000	ST	
9	5.050-404.0	Joining piece suction bar	2.000	ST	
10	5.332-216.0	Helical spring	4.000	ST	
11	4.777-097.0	Suction bar complete replacement BR 40/1	2.000	ST	
11	4.777-098.0	Suction bar oil resistant replacement BR	2.000	ST	OIL RESISTANT
12	5.034-799.0	Plate brush holder	2.000	ST	
13	7.303-212.0	Screw 5x20 -A2-70 (In6Rd)	6.000	ST	
14	7.312-004.0	Washer 8 -200HV-A3E ISO 7089	3.000	ST	
15	5.050-403.0	Handle carriage adjustment	1.000	ST	
16	5.332-207.0	Helical spring	1.000	ST	
17	5.034-929.0	Bolt carriage	1.000	ST	
18	4.033-326.0	Brush housing replacement	1.000	ST	
19	6.661-221.0	Capacitor	1.000	ST	
20	5.034-873.0	Plate reinforcement	1.000	ST	
21	7.312-233.0	Serrated lock washer A8,4-FSt-A3E DIN67	2.000	ST	
22	7.311-004.0	Hexagon nut M8 -8-A3E ISO 4032	2.000	ST	
23	6.661-220.0	Capacitor	1.000	ST	
24	6.682-975.0	Starting electronic MAS (d) 100-120V	1.000	ST	
25	7.343-300.0	Lock washer 7-A2 DIN 6799	1.000	ST	
26	6.630-438.0	Micro switch	1.000	ST	
27	6.339-249.0	Rubber buffer motor	2.000	ST	
28	5.050-654.0	Retainer micro switch	1.000	ST	
29	7.303-108.0	Screw 5x20 -10.9-R2R (In6Rd)	1.000	ST	
30	5.050-572.0	Seal exhaust air	1.000	ST	
31	5.034-894.0	Joint ring	2.000	ST	
32	6.273-055.0	Profile gasket	2.000	M	TO ORDER AS CUT GOODS
33	4.035-253.0	Suction lip set 10x BR 40/10	1.000	ST	

31 Brush housing

POS	Article no.	Description	Quantity	Unit	Foot note text
33	4.035-288.0	Suction lip oil resistant set 10x BR 40/	1.000	ST	
34	5.034-878.0	Bush suction bar	4.000	ST	
35	7.303-212.0	Screw 5x20 -A2-70 (In6Rd)	4.000	ST	

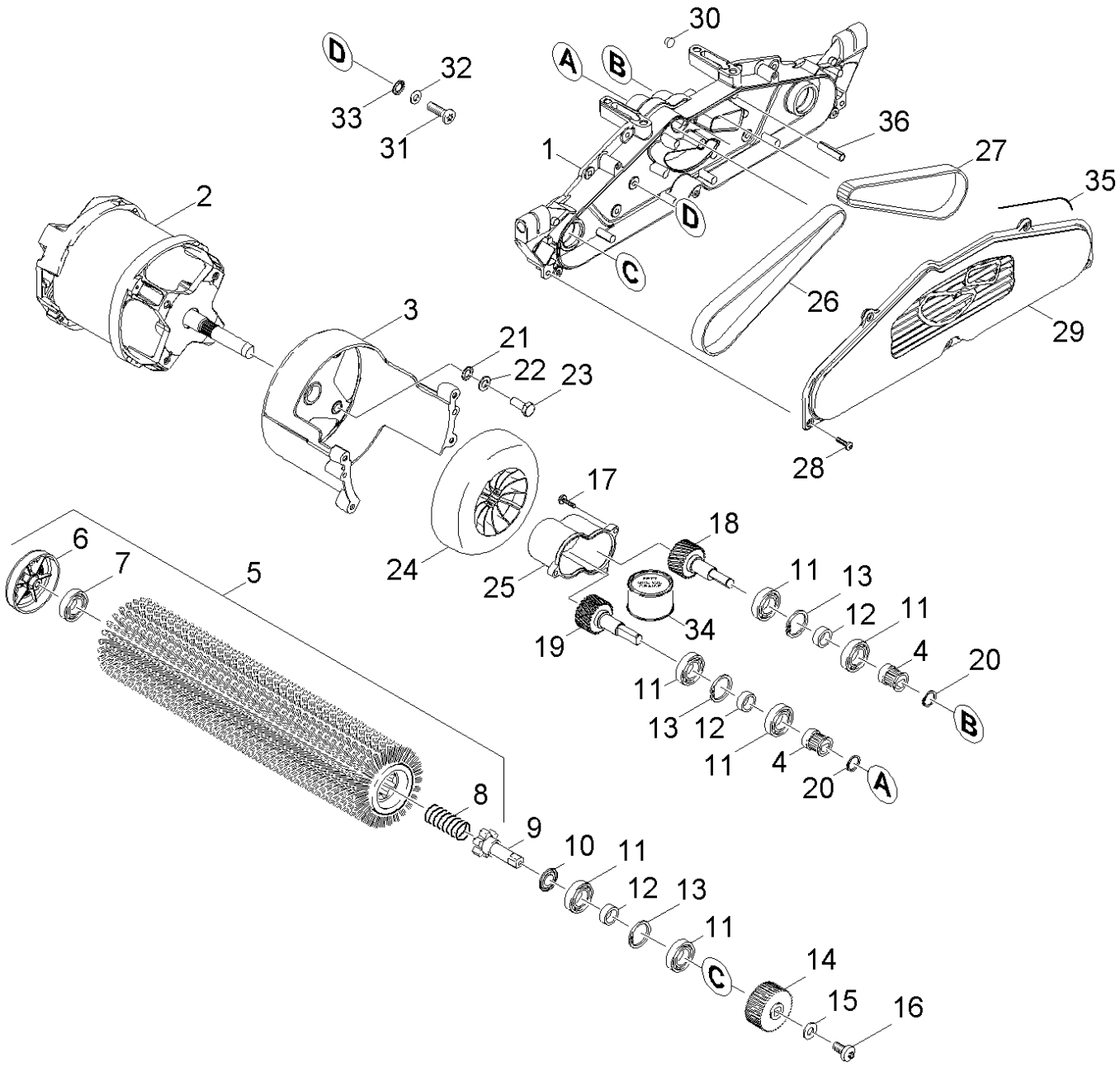
30
D
32
A
B
33
36
31
1
27
35
2
D
C
26
3
29
21
22
23
28
17
18
6
7
5
24
25
11
13
12
11
34
19
4
20
11
B
13
12
11
4
20
A
8
9
10
11
12
13
11
C
14
15
16

32 Transmission

POS	Article no.	Description	Quantity	Unit	Remark	Foot note text
1	5.050-445.0	Gear case worked	1.000	ST		
2	6.680-000.0	Electric motor 1,1 kW 120 V	1.000	ST		
3	5.050-432.0	Flange motor worked	1.000	ST		
4	5.625-318.0	Belt pulley 21Z	2.000	ST		
5	4.762-274.0	Roller brush horsehair nature BR VS 400	2.000	ST		
5	4.762-252.0	Roller brush green (old colour grey)	2.000	ST		
5	4.762-481.0	Roller brush black complete	2.000	ST		
5	4.762-251.0	Roller brush orange (old colour red)	2.000	ST		
5	4.762-003.0	Roller brush red complete	2.000	ST		
5	4.762-250.0	Roller brush white (old colour black)	2.000	ST		
6	4.038-677.0	Sheet metal component thread deflector	2.000	ST		
7	6.401-363.0	Ball bearing	2.000	ST		
8	5.332-114.0	Helical spring	2.000	ST		
9	5.100-571.0	Driveshaft 59mm	2.000	ST		
10	6.363-292.0	Joint ring NILOS 6002	2.000	ST		
11	7.401-115.0	Ball bearing 6002-2RS -WAELZLAGST DIN 62	8.000	ST		
12	5.110-686.0	Spacer sleeve	4.000	ST		
13	7.343-231.0	Locking ring 32x1,2 -St-ph DIN 472	4.000	ST		
14	5.625-357.0	Belt pulley 56Z HTD 3M	2.000	ST		
15	7.312-292.0	Washer 6 -A2 ISO 7093-1	2.000	ST		
16	6.304-180.0	Screw M6X12-A2/70-ISO7045 (IN6RD)	2.000	ST		
17	7.303-039.0	Screw M5x16 -St-P2R (In6Rd)	3.000	ST		
18	4.100-234.0	Shaft gear right	1.000	ST		
19	5.105-684.0	Shaft transmission left	1.000	ST		
20	7.343-003.0	Locking ring 12x1-Rf-St DIN 471	2.000	ST		
21	7.312-233.0	Serrated lock washer A8,4-FSt-A3E DIN67	4.000	ST		
22	7.312-017.0	Washer 8-A2 ISO 7089	4.000	ST		
23	7.304-397.0	Hexagonal head screw M8x20-8.8-A2E ISO	4.000	ST		
24	5.050-358.0	Blower wheel	1.000	ST		

POS	Article no.	Description	Quantity	Unit	Remark	Foot note text
25	5.050-357.0	Cover gear	1.000	ST		
26	6.348-444.0	Toothed belt HTD-420-3M-15 CXPIII	1.000	ST		
27	6.348-431.0	Toothed belt HTD-474-3M-15 CXPIII	1.000	ST		
28	7.303-039.0	Screw M5x16 -St-P2R (In6Rd)	6.000	ST		
29	5.050-310.0	Cover gear case	1.000	ST		
30	6.368-347.0	Cap D5	1.000	ST		
31	7.306-105.0	Screw M6x30 -8.8-R3R (In6Rd)	4.000	ST		
32	7.312-003.0	Washer 6 -200HV-A3E ISO 7089	1.000	ST		
33	7.312-232.0	Serrated lock washer A6,4-FSt-A3E DIN 6	4.000	ST		
34	6.288-095.0	Viscous oil	1.000	ST	50g	
35	6.273-037.0	Seal string cellular rubber 3	1.000	M		TO ORDER AS CUT GOODS
36	7.314-944.0	Spring pin 5x24-St ISO 8752	2.000	ST		

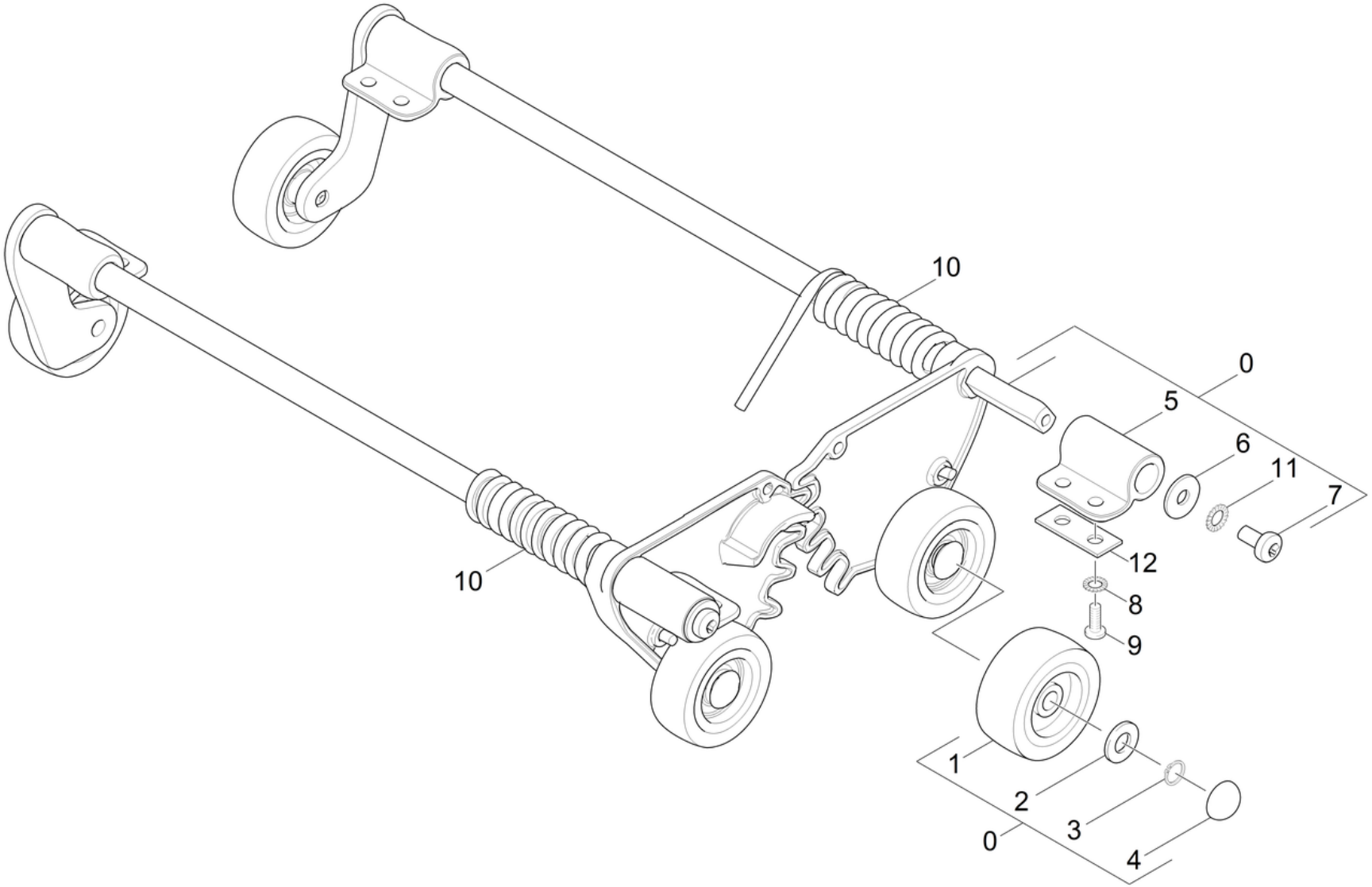
10
0
5
6
11
7
12
8
9
10
1
2
3
0
4

POS	Article no.	Description	Quantity	Unit	Foot note text
0	3.034-008.0	Carriage complete	1.000	ST	
1	6.435-373.0	Wheel traceless grey D50	4.000	ST	
2	7.362-002.0	Joint ring A8x11,5 -Cu DIN 7603	4.000	ST	
3	7.343-127.0	Locking ring 8x0,8 -Rf-St DIN 471	4.000	ST	
4	6.343-132.0	Lock washer 8	4.000	ST	
5	5.050-397.0	Bearing flange carriage	4.000	ST	
6	7.312-292.0	Washer 6 -A2 ISO 7093-1	4.000	ST	
7	6.304-180.0	Screw M6X12-A2/70-ISO7045 (IN6RD)	4.000	ST	
8	7.312-041.0	Serrated lock washer A5,3-1.4310 DIN 67	8.000	ST	
9	7.303-212.0	Screw 5x20 -A2-70 (In6Rd)	8.000	ST	
10	4.034-179.0	Leg spring set	1.000	ST	
11	7.312-020.0	Serrated lock washer A6,4-1.4310 DIN679	4.000	ST	ORDER ACCORDING TO CONSUMPTION
12	5.011-043.0	Plate height compensation	4.000	ST	

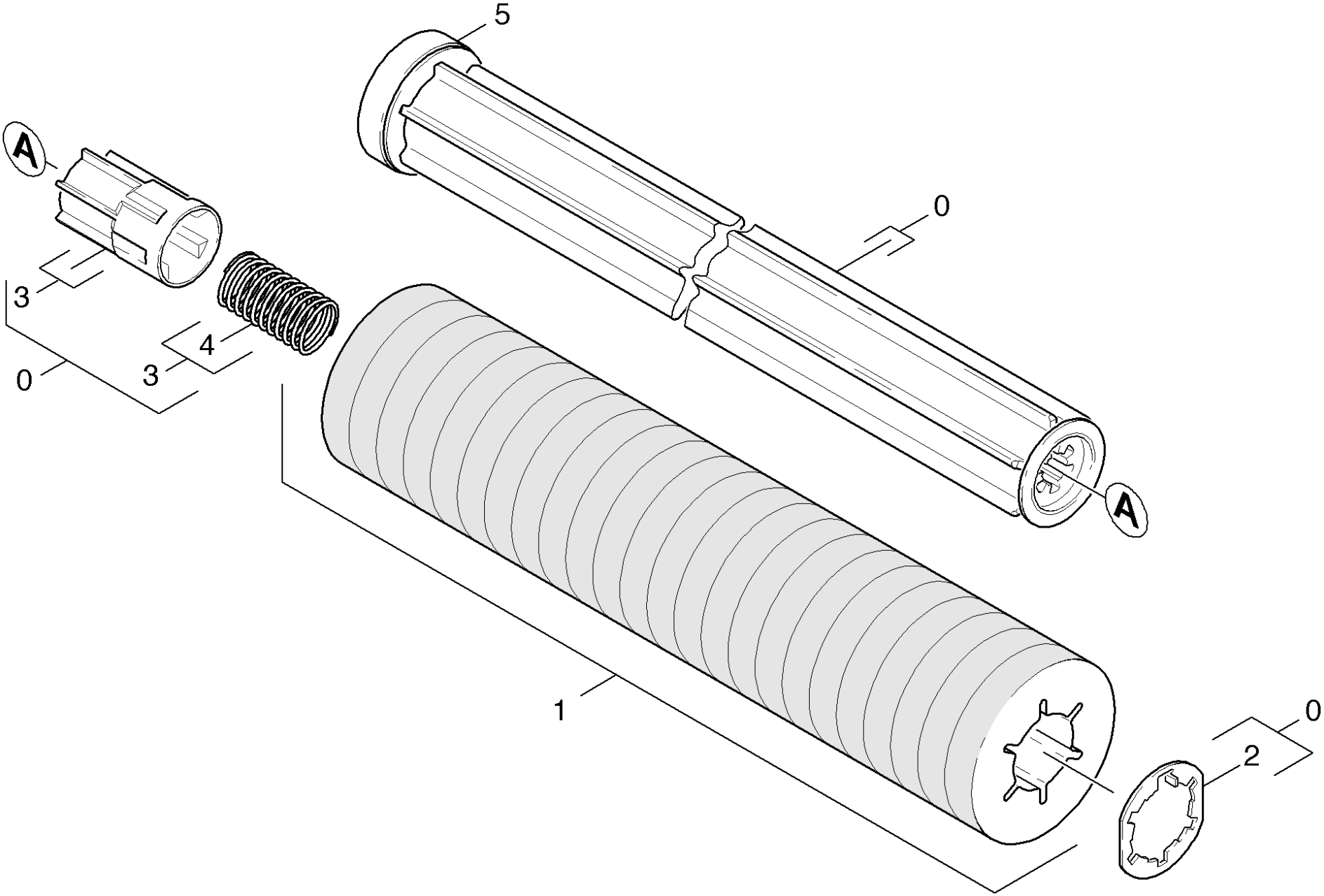
5
A
0
3
4
3
0
A
1
0
2

50 Accessories pad roll

POS	Article no.	Description	Quantity	Unit
0	4.762-228.0	Roll Pad BR VS 400	1.000	ST
1	6.369-726.0	Pad red with sleeve	1.000	ZSA
1	6.369-727.0	Pad white with sleeve BR VS 400	1.000	ZSA
1	6.369-724.0	Pad yellow with sleeve	1.000	ZSA
1	6.369-725.0	Pad green with sleeve	1.000	ZSA
2	4.115-003.0	Washer closure	1.000	ST
3	5.120-313.0	Hub pad roll BR VS	1.000	ST
4	5.332-469.0	Helical spring	1.000	ST
5	4.038-677.0	Sheet metal component thread deflector	1.000	ST

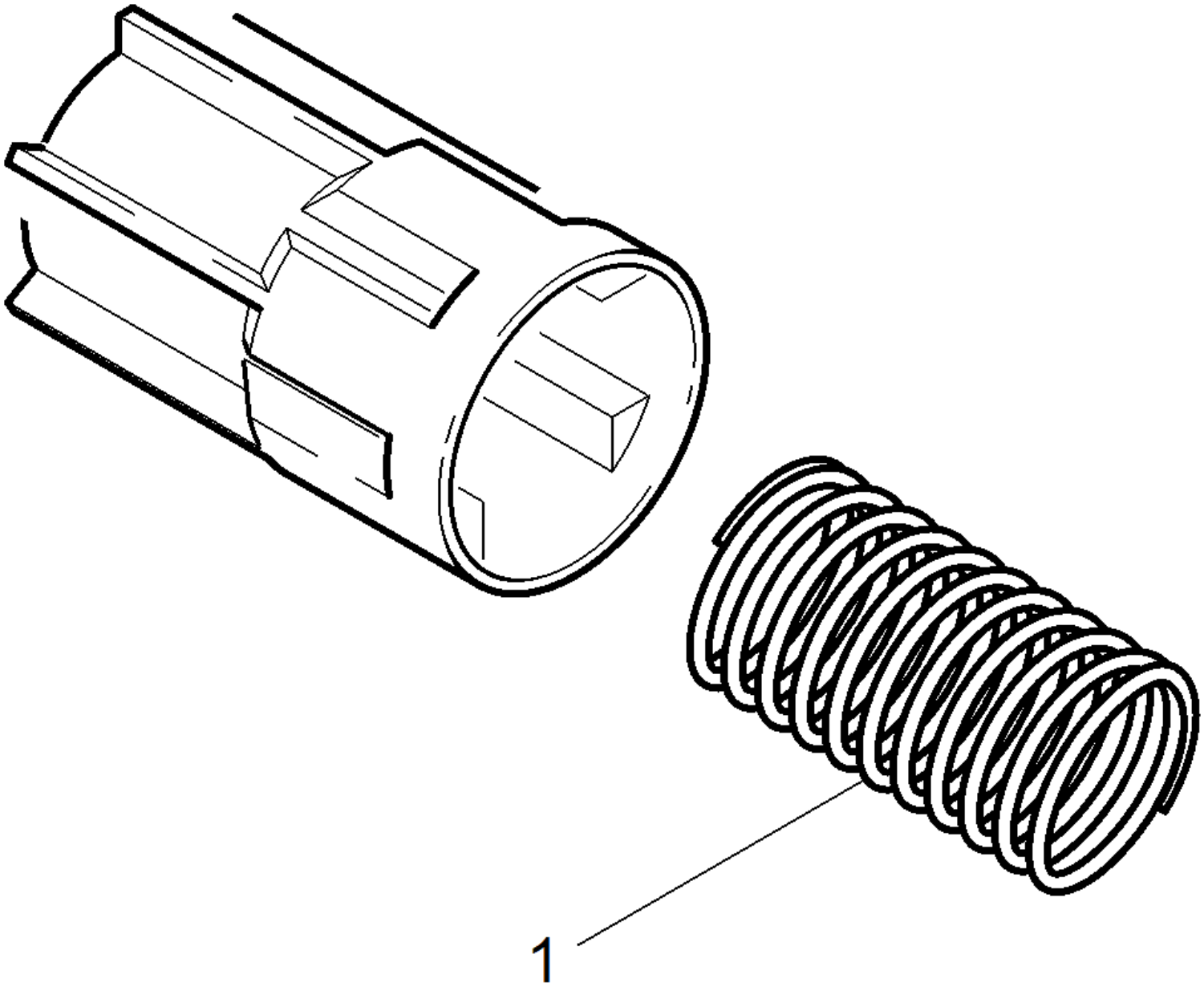
1

3 Hub pad roll BR VS (5.120-313.0)

POS	Article no.	Description	Quantity	Unit
1	5.332-469.0	Helical spring	1.000	ST

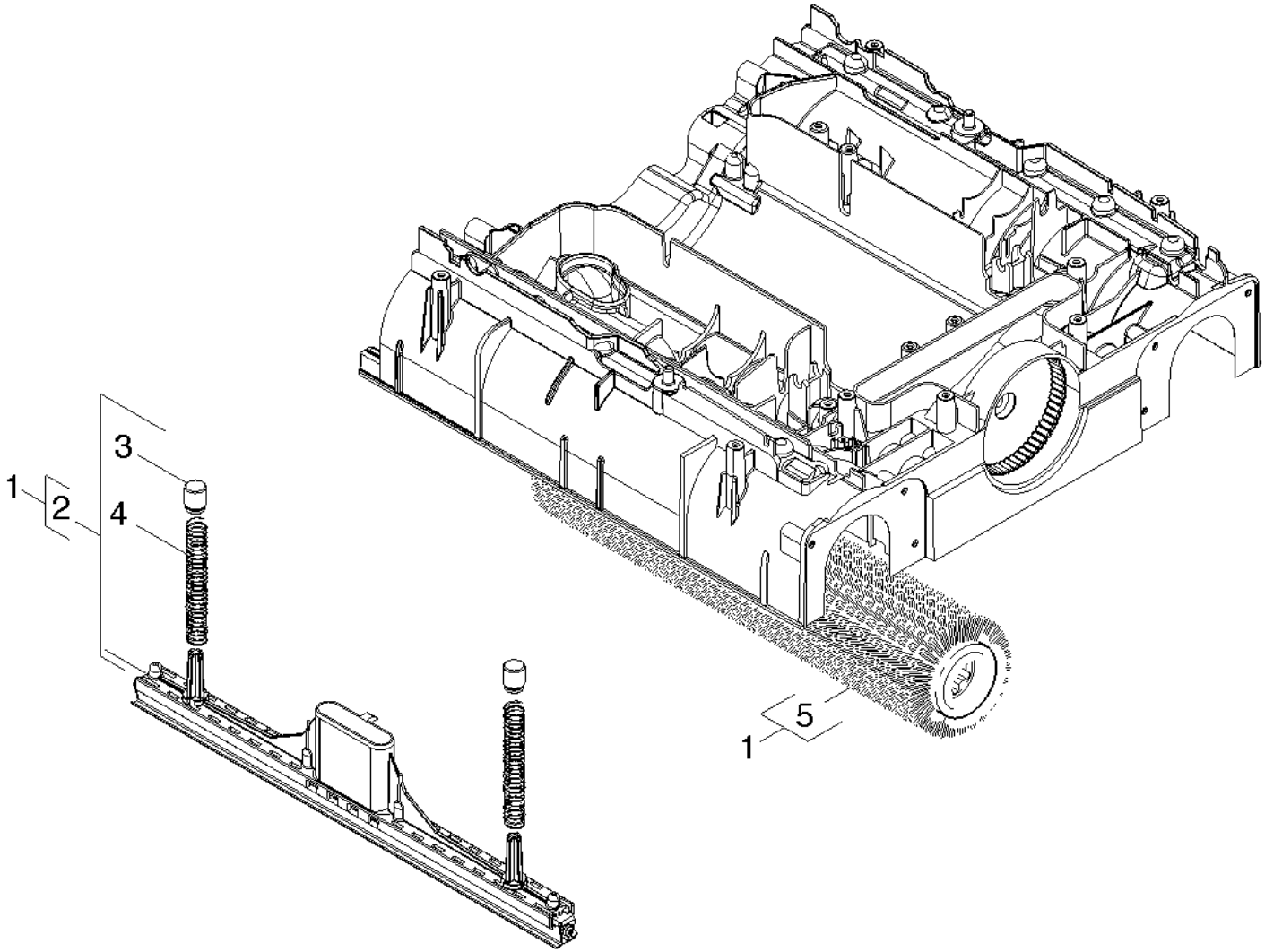
1
2
3
4
5
1

60 Accessories carpet cleaning

POS	Article no.	Description	Quantity	Unit
1	2.783-014.0	ABS carpet cleaning BR 40/10 C	1.000	ST
2	4.777-417.0	Suction bar carpet cleaning	1.000	ST
3	5.034-897.0	Spacer spring suction bar	2.000	ST
4	5.332-216.0	Helical spring	2.000	ST
5	4.762-254.0	Roller brush complete light blue	1.000	ST

1 ABS carpet cleaning BR 40/10 C (2.783-014.0)

POS	Article no.	Description	Quantity	Unit
10	4.762-254.0	Roller brush complete light blue	2.000	ST
20	6.295-490.0	RM 769** 0,5l Universal Stain Remover	1.000	ST
30	6.290-224.0	RM 764 OA GBP 1l cleaner	1.000	ST
40	4.777-417.0	Suction bar carpet cleaning	2.000	ST